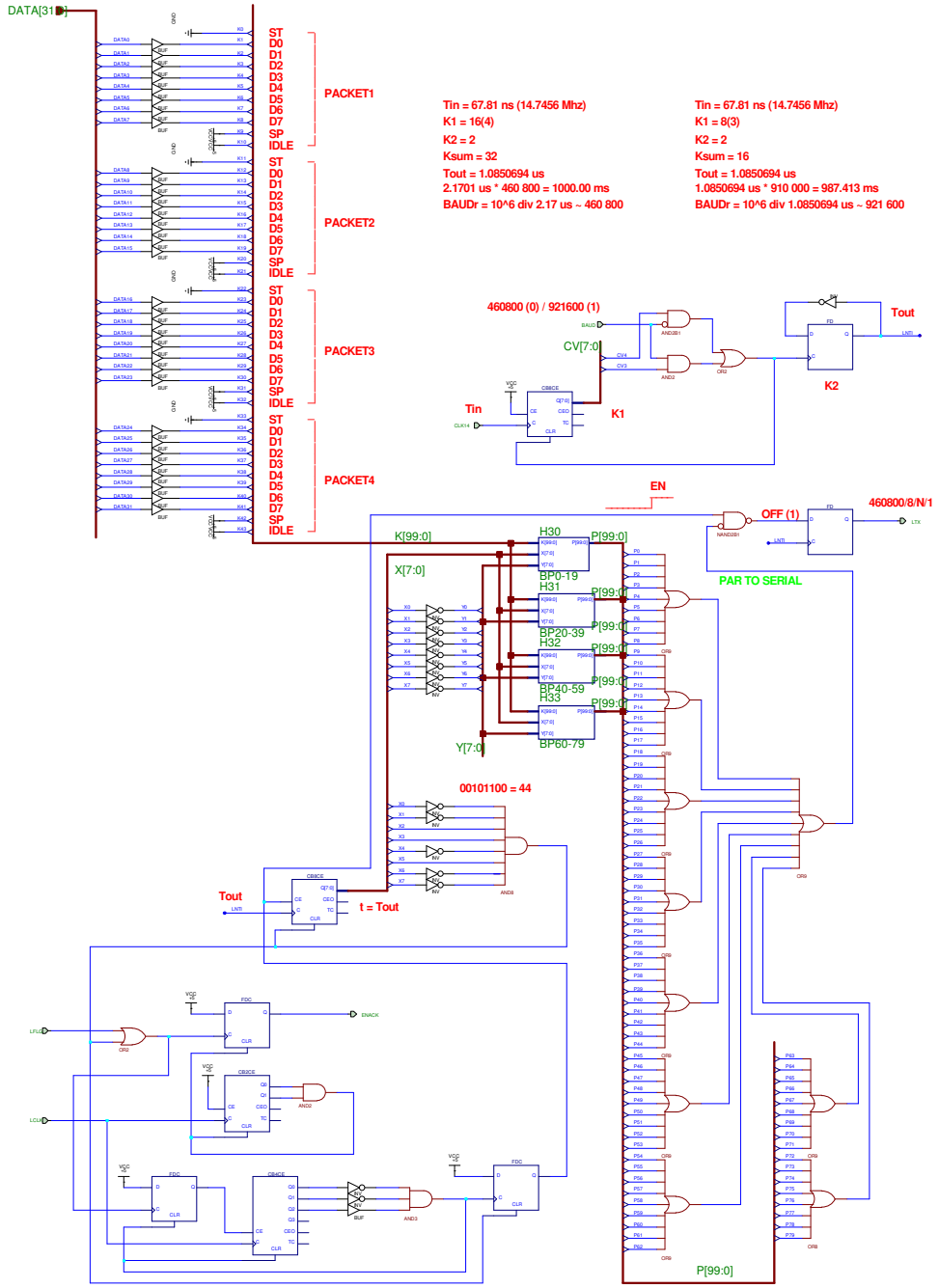

Xilinx Corporation 2100 Logic Drive San Jose, CA 95124 Date Last Modified: 3/3/15	Macro: UART_TX