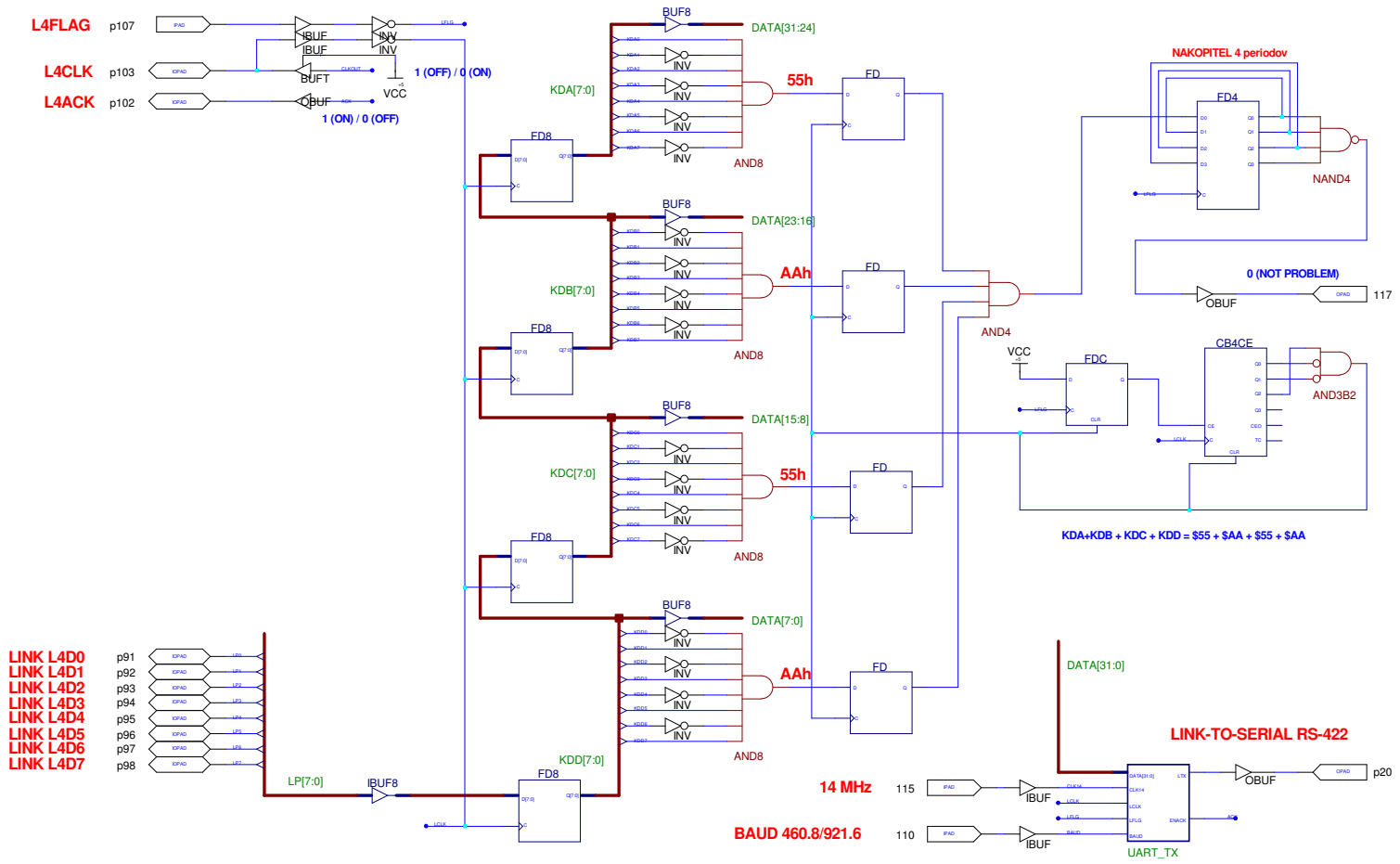

Xilinx Corporation	Project: KOD
2100 Logic Drive	Macro: KOD1
San Jose, CA 95124	Date: 2/26/15
Date Last Modified: 3/3/15	